ergoline
MOVING TO HEALTH

ergoselect 12 – Technical Specifications

Dimensions

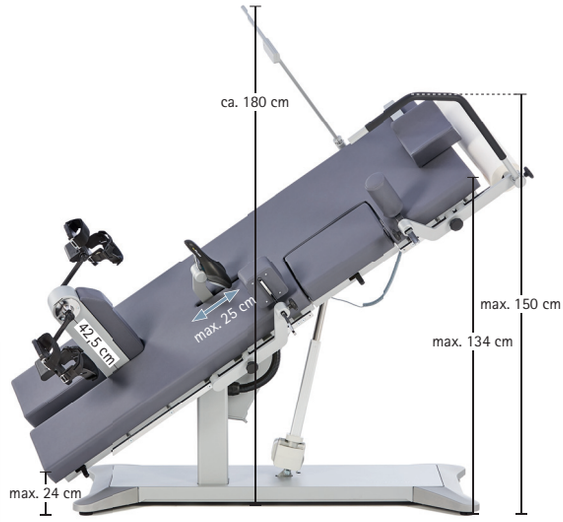

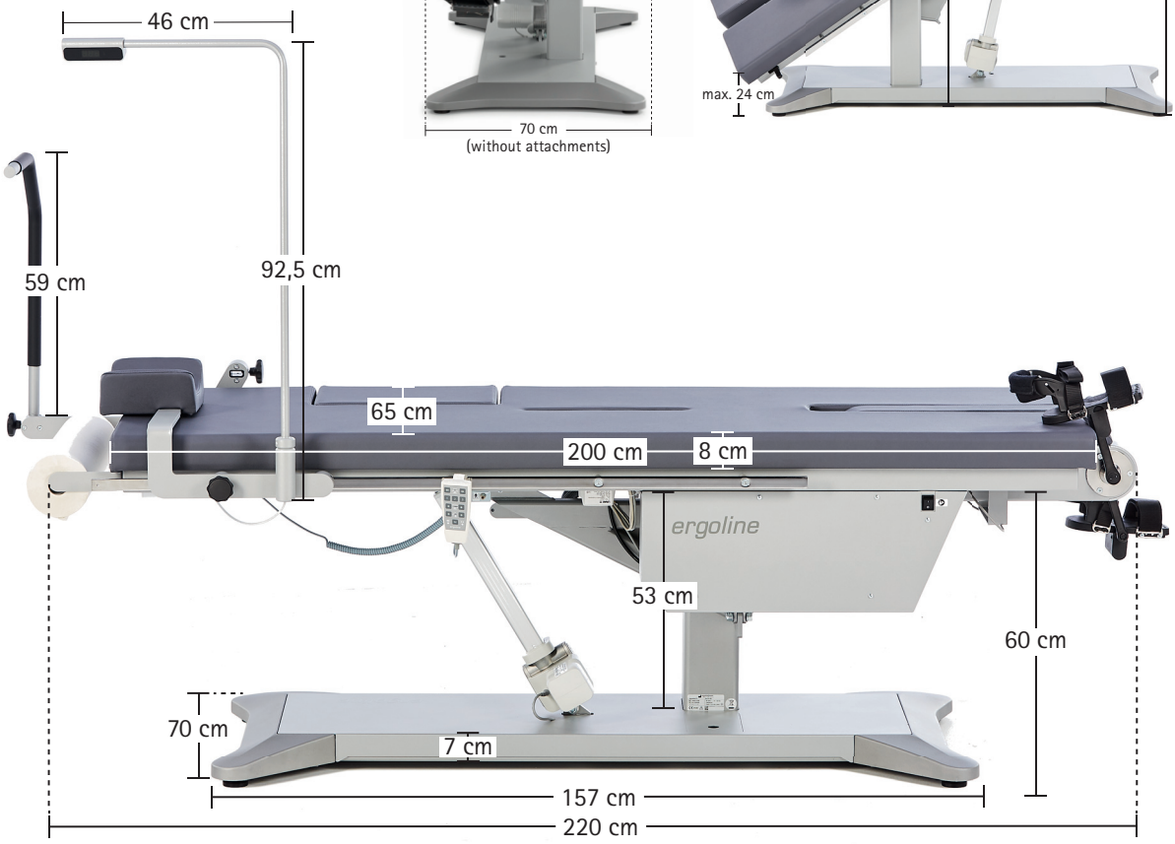

DAMIE
DISTRIBUTION D'APPAREILS MÉDICAUX INFORMATIQUES ÉLECTRONIQUES
DAMIE SAS · 15 rue Léon Gaumont · 44700 Orvault
+33 2 51 77 81 30 · www.damie.com

ergoline
MOVING TO HEALTH

ergoselect 12 – Technical Specifications

Reclining ergometer	ergoselect 12			
Adjustment of couch surface (tilt/incline)	horizontal up to 38° and lateral inclination up to 39°, continuous, motor-driven via remote control, 3 positions user-programmable			
Seat adjustment	continuous, motor-driven via remote control			
Remote control, cable/wireless	● / ○			
Couch surface	200 cm x 65 cm			
Couch height (examination couch)	73 cm			
Upholstery fabric	easy-care, abrasion-resistant, antimicrobial, antibacterial acc. to JIS Z 2801, disinfectant-resistant, fulfills requirements of German Medical Devices Act (MPG) acc. to DIN EN ISO 10993-5, -10			
Patient weight (max.)	200 kg			
Emergency lowering bypower failure	integrated rechargeable batteries, lowering to resting position with emergency button			
Brake unit				
Brake system	computer-controlled eddy current brake			
Drive	special multi-stage belt technology (no slippage, low wear)			
Load	6 – 450 watts, speed-independent			
Accuracy	to DIN VDE 0750-238			
Speed range	30 – 130 rpm			
Control terminal	**Type "D"**	**Type "M"**	**Type "P"**	**Type "T"**
Integrated/on separate stand	● / –	– / ○	– / ○	– / ○
Display, numeric	–	load, speed (rpm), time, blood pressure (LCD)		7" color display
Display, graphic (e.g., load or pulse curve)	–	–	–	●
Patient display	–	speed with target range, swiveling		
Keyboard	–	–	membrane keyboard	Touch keyboard
Exercise test protocols				
User programmable	–	–	10	10
Manual load control	–	–	●	●
Training protocols				
User programmable	–	–	–	10
Preprogrammed performance tests	–	–	–	3
Expansion options				
Automatic blood pressure measurement	○	○	○	○
Interfaces				
Digital (RS-232, USB)/Bluetooth/WiFi	● / ○ / ○			
Dimensions and weight				
Reclining ergometer		**Reclining ergometer with packaging**		
Length: 220 cm		Length: 230 cm		
Width: 90 cm (with attachments)		Width: 98 cm		
Height: 180 cm (max.)		Height: 110 cm		
Weight: approx. 255 kg		Weight: approx. 295 kg		
Miscellaneous				
Power supply	100 – 240 VAC / 50 – 60 Hz / 200 VA max.			

● Standard ○ Option

DAMIE
DISTRIBUTION D'APPAREILS MÉDICAUX INFORMATIQUES ÉLECTRONIQUES
DAMIE SAS · 15 rue Léon Gaumont · 44700 Orvault
+33 2 51 77 81 30 · www.damie.com